Product Report **Manufacturer: Extreme Metal Fabricators, LLC.**

2160 SW Poma Drive
Palm City, FL 34990
(772)872-8034

Florida Product Approval # 17022.1 5-V Crimp **NON HVHZ**

Compliant with Florida Building Code 2017 (6th ed.)
Compliant with Florida Product Approval Rule # 61G20-3
Compliant: Keystone Certifications

Product: 5 V Crimp 26GA Steel Roof Panel FBC Sec. 1507.4.2
Yield strength: 50 ksi min.; Attached to min. 15/32" plywood or Wood Deck w/ min. 0.42 specific gravity with screws. 24" Coverage
Rib Height 3/8"
Corrosion Resistant Compliant: FBC Sec. 1507.4.3
Fastener 1 (Method 1 Attachment): #9 x 1-1/2" Hex-Washer Head wood screw* to penetrate 3/16" min. thru deck or 5/8" embedment into wood plank. (*or sufficient length to meet requirements)
Fastener 2 (Method 2,3, & 4 Attachment): #10 x 1-1/2" Hex-Washer Head wood screw* to penetrate 3/16" min. thru deck or 5/8" embedment into wood plank. (*or sufficient length to meet requirements)
Underlayment: To be compliant with FBC Sec. Chart 1507.1.1

Slope: Shall be in compliance with FBC Sec. 1507.

See Fastener attachment specifications above

Install Details: Table A Allowable Loads	METHOD 1	METHOD 2	METHOD 3	METHOD 4
DESIGN PRESSURE*	-86 PSF	-93.5 PSF	-101 PSF	-228 PSF
ROW SPACING	16" o.c.	16" o.c.	8" o.c.	6" o.c.
FASTENER SPACING (ALONG Panel width)	12" o.c.	12" o.c.	12" o.c.	12" o.c.
FASTENER SIZE	#9	#10	#10	#10

Reference Data: ARCHITECTURAL TESTING, INC. TST ID#: 1527

UL 580-06 & 1897-04[1]	Test	Report	D05893.01-450-18	05/02/14
	Test	Report	F3366.01-450-18	12/18/15
TAS 125-03	Test	Report	D05893.02-450-18	07/22/14

**EQUIVALENCY-UL 1897-04 is equivalent to test standard UL 1897-12* **Design pressure margin of safety 2:1*

Locke Bowden, P.E. does not have, not will acquire a financial interest in any company manufacturing or distributing products under this evaluation.
Locke Bowden, P.E. is not owned, operated, or controlled by any company, manufacturer, or distributing products under this report.

LOCKE D. BOWDEN LICENSE NO. 67621 STATE OF FLORIDA PROFESSIONAL ENGINEER

7/31/17

FL17022.1 5V Crimp (26GA Steel), 24" Wide Roof Panel - Details

Limitations:

1. Underlayment to be compliance with current Florida Building Code (FBC)2017 6th ed.
2. Minimum slope to be compliant with Florida Building Code 2017 6th ed., and per with Manufacturer's installation reference.
3. Products are compliant for State of Florida product approval per Rule 61G20-3. Compliance Method: 1-D
4. Engineering analysis for "project specific approval by local authorities w/jurisdiction is allowed by other registered engineers.
5. Fire classification is not part of this acceptance. Shear diaphragm values are outside this report.
6. Support framing in compliance w/FBC 2017 6th ed., Chapter 22 for Steel, Chapter 23 for Wood and Chapter 16 for Structural Loading.
7. This report does not imply warranty, installation, recommended product use outside of this report.

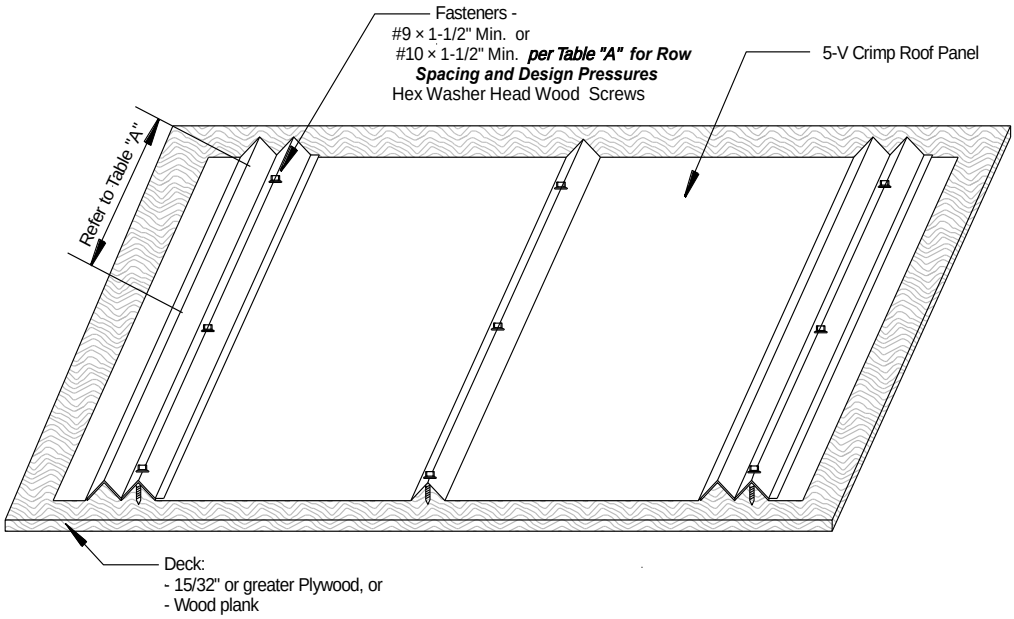

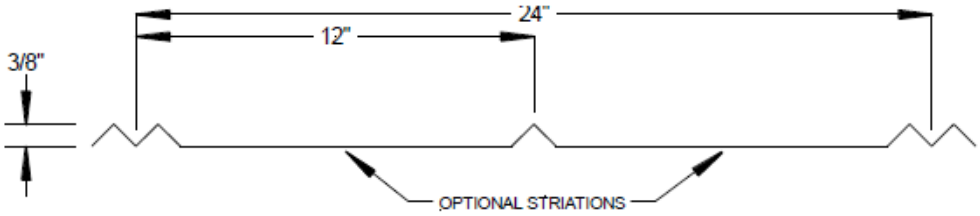
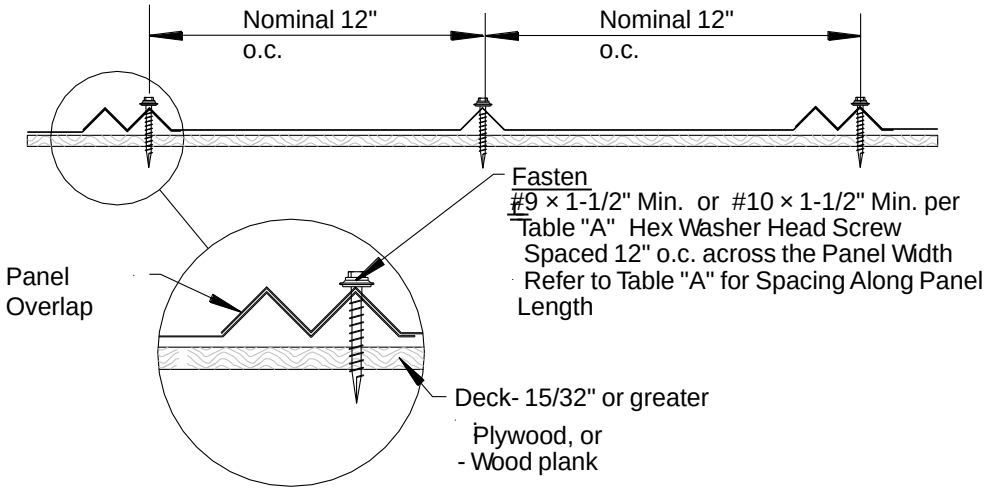
Panel Profile